6V_2114_70_EU_193x159_MT5596_v0.1_20191125

PART	COLOUR	TECHNIQUE	CHANGES / REMARKS	V
I PHILIPS LOGO	PANTONE Cool Gray 1C	SILKSCREEN PRINTING	ON HIGH GLOSS SURFACE	00
J STICKER AREA		INMOLDED	ON POLISHED SURFACE	00
K ALL TEXTS, ICON AND CAUTION LABELS		ENGRAVED	ENGRAVED 0.3 (DEPTH 0.3 MM)	00

LABEL DOWN IO TEXT FONTS: CentraleSansCnd Bold 10/8pt

LABEL SIDE IO TEXT FONTS: CentraleSansCnd Bold 10pt

100 mm

100 mm

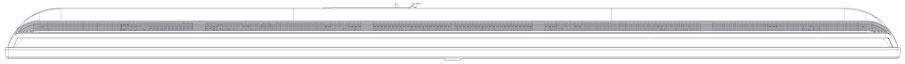

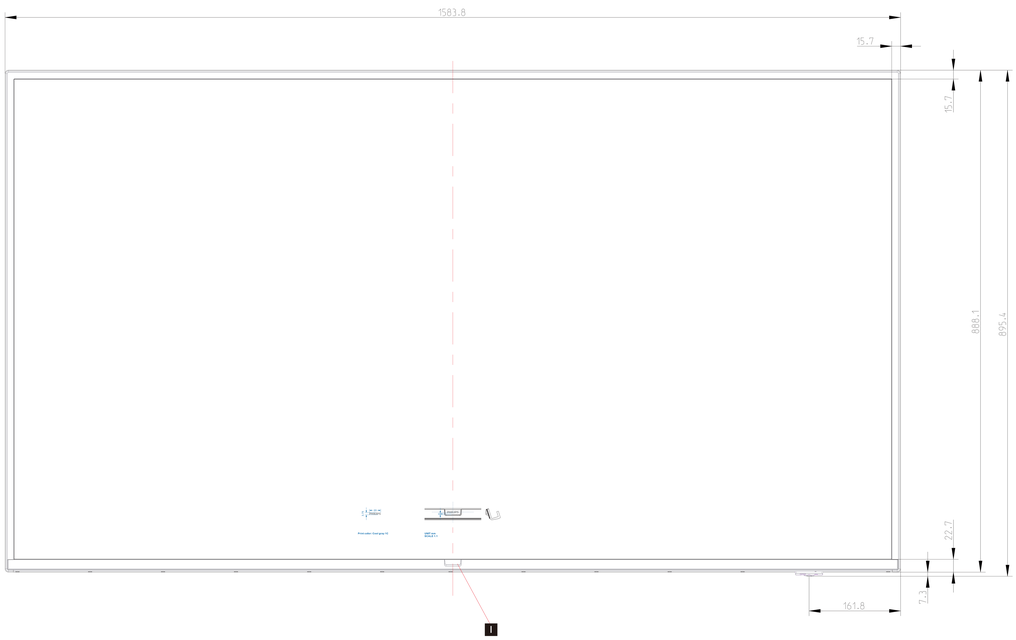

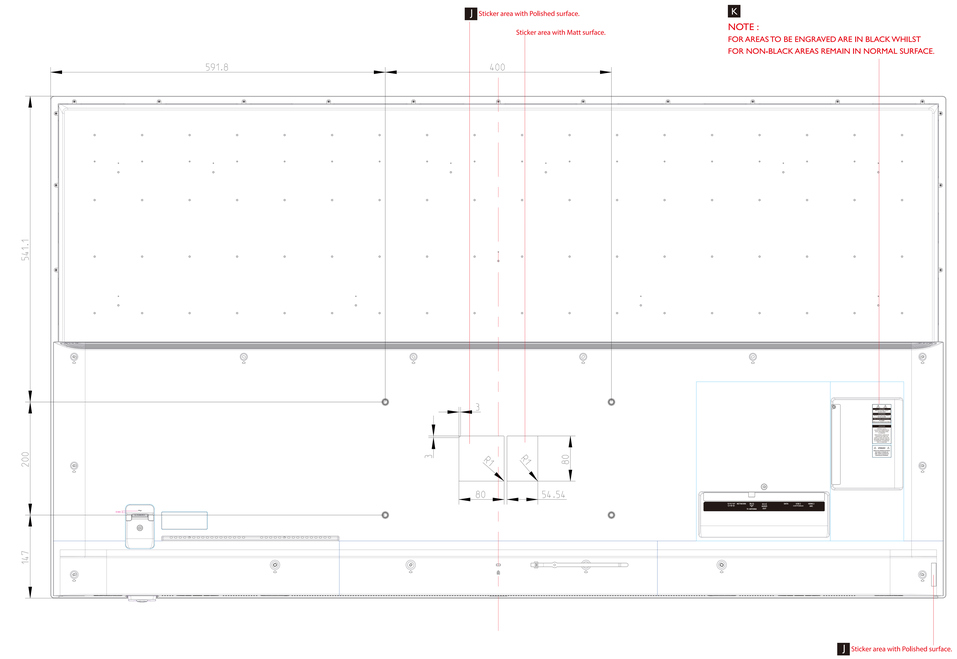

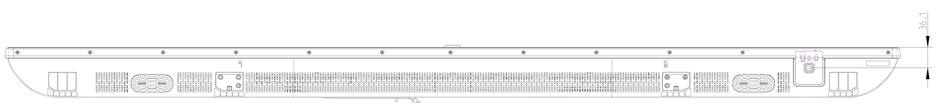

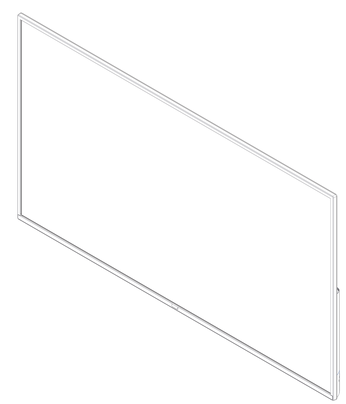

SCALE 0.500

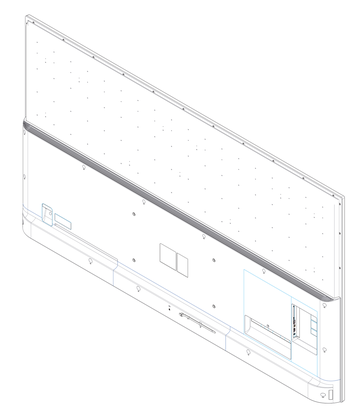

SCALE 0.500